

sonar sea

NL-01

FOR VESSELS UNDER 50 METRES

NAVIGATION LIGHT NL-01

NL-01 Series navigation lights are developed for vessels under 50 metres. With an efficient LED optical system and a construction suited to marine conditions, they provide reliable signal transmission. The lights operate on a 12–24 V DC supply, and their durable IP67-rated aluminium housing and UV-resistant lens deliver long-lasting performance. The compact and robust design allows easy integration, while clearly defined light sectors provide unambiguous navigation signalling. Low energy consumption ensures efficient operation, the series is compatible with small and medium-sized vessels, and its durable design is built for harsh marine conditions.

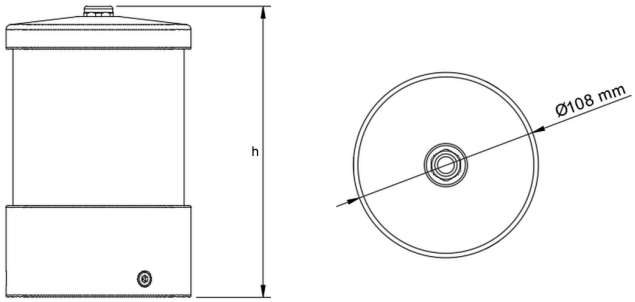

OPTICAL PERFORMANCE

The **NL-01** Series is equipped with optical components that provide accurate signalling through sharp sector separation. Homogeneous light distribution and low glare ensure high visibility at night and in low-visibility conditions. Sidelights provide 112.5 degrees, the stern light 135 degrees, the masthead light 225 degrees, and the all-around and tricolor lights 360 degrees of horizontal light distribution. The masthead light provides 3 nautical miles of visible range, all other models 2 nautical miles.

MECHANICAL DURABILITY

The IP67 rating provides protection against water and dust. The corrosion-resistant aluminium housing and UV-resistant lens ensure a long service life in harsh marine conditions.





sonar sea

NL-01

FOR VESSELS UNDER 50 METRES

NAVIGATION LIGHT NL-01

ELECTRICAL DESIGN & COMPATIBILITY

The wide 12-24 V DC operating range allows easy adaptation to different onboard electrical systems. A reliable LED driver design delivers high efficiency at low energy consumption. Various mounting options allow flexible use on sailing yachts, motor yachts and motor vessels.



MODELS

COVERAGE	MODEL	LIGHT SECTOR	VISUAL RANGE	DESCRIPTION
	NL-01 STARBOARD	112.5° - Green	2 NM	Starboard Light
	NL-01 PORT	112.5° - Red	2 NM	Port Light
	NL-01 STERN	135° - White	2 NM	Stern Light
	NL-01 MASTHEAD	225° - White	3 NM	Masthead Light
	NL-01 ALL-AROUND	360° - White	2 NM	Anchor Light
	NL-01 TRICOLOR / ANCHOR	360° - White / Red / Green	2 NM	All-Around Light

LIGHT FEATURES	
LIGHT SOURCE	LED
LED LIFESPAN	>100000 hours
LED	High Quality Power LED
LENS	Clear Polycarbonate
ELECTRICAL FEATURES	
OPERATING VOLTAGE	12-24 VDC
CIRCUIT PROTECTIONS	Surge Voltage, Surge Current and Overcurrent Protection (OCP)
PHYSICAL FEATURES	
BODY MATERIAL	High Quality Anodized Marine Grade Aluminium Body and Top
OPTICAL COVER	UV Resistant Acrylic PMMA
WATER RESISTANCE	IP 67
OPERATING TEMPERATURE RANGE	-40°C to 80°C
FIXING	Custom Mounting Kit Available on Demand
HEIGHT	Tricolor with Cable Gland 155mm, Unicolor with Cable Gland 105mm Tricolor with Connector 174mm, Unicolor with Connector 124mm
DIAMETER	108mm
WEIGHT	Tricolor with Cable Gland 1.57 kg, Unicolor with Cable Gland 1.28 kg Tricolor with Connector 1.77 kg, Unicolor with Connector 1.46 kg
OPTIONS AND STANDARDS	
STANDARDS	EN 60945
APPLICATIONS	Sailing Yachts, Motor Yachts, Motor Vessels
QUALITY MANAGEMENT	ISO 9001:2015, ISO 14001:2015, ISO 45001:2018 - TÜV THÜRINGEN

sonar sea

SONARSEA KARA VE DENİZ ARAŞTIRMALARI A.Ş.

Head office : 600 Evler Mah. 146 Sok. A Blok No: 10/18, 10200, Bandırma/BALIKESİR
Production : 600 Evler Mah. 2036 Sok. No:33-35, 10200, Bandırma/BALIKESİR
Mail : info@sonarsea.com
Web : www.sonarsea.com